Contents

For the user

Important safety information 3

Description of the appliance 4

The control panel 4

Before use 5
Setting the water softener 5
Rinse aid 7

Using your appliance 8
Loading your appliance 8
Adjusting the height of the upper basket 9
Use of detergent 10

Hints and tips 11

Washing programmes 12

Operating sequence 13

Maintenance and cleaning 14

Something not working 16
Service and spare parts 17

Hints for test centres 18

Technical specifications 18

For the installer

Installation instructions 19
Water supply connections 19
Water outlet hose connection 20
Electrical connection 20

Adjusting the worktop 21
Fitting under a counter 21
Levelling 21

IUS509

IZC 20S.

Guide to use the instruction book

The following symbols will be found in the text to guide you throughout the instructions:

⚠ **Safety instructions**

1. 2. 3. **Step by step**

ⓘ **Hints and tips**

Environmental information

⚠ Important safety information

It is most important that this instruction book should be retained with the appliance for future reference. Should the appliance be sold or transferred to another owner, or should you move house and leave the appliance, always ensure that the book is left with the appliance in order that the new owner can get to know the functioning of the appliance and the relevant safety information.

This information has been provided in the interest of your safety. You MUST read it carefully before installing or using the appliance.

Installation

- This appliance is heavy. Care should be taken when moving it.
- It is dangerous to alter the specifications or attempt to modify this product in any way.
- Care must be taken to ensure that the appliance does not stand on the electrical supply cable.
- Any electrical work required to install this appliance should be carried out by a qualified electrician or competent person.
- Any plumbing work required to install this appliance should be carried out by a qualified plumber or competent person.

Child Safety

- This appliance is designed to be operated by adults. Children should not be allowed to tamper with the controls or play with the product.
- Keep all packaging well away from children.
- Keep all detergents in a safe place out of children's reach.

During Use

- Items that are contaminated by petrol, paint, steel or iron debris, corrosive, acidic or alkaline chemicals must not be washed in this dishwasher.
- Under no circumstances should you open the door whilst the appliance is in operation. Always turn off the appliance before opening the door.
- Only use detergent specifically designed for use in dishwashers.
- Long bladed knives stored in an upright position are a potential hazard.
- Long and/or sharp items of cutlery such as carving knives must be positioned horizontally in the upper basket.
- When finishing loading or unloading close the door, as an open door can be a hazard.
- Do not sit or stand on the open door.
- Isolate the appliance from the power supply and turn off the water supply after use.
- Care should be taken when cleaning the bottom door seal and hinge area as any exposed metal edges may cut if care is not taken.
- This product should be serviced by an authorised Service engineer, and only genuine spare parts should be used.
- Under no circumstances should you attempt to repair the machine yourself. Repairs carried out by inexperienced persons may cause injury or serious malfunctioning. Contact your local Service Force Centre. Always insist on genuine spare parts.

Conservation

In the interest of the environment:

- Materials marked with the symbol ♲ are recyclable.
- Check with your local Council or Environmental Health Office to see if there are facilities in your area for re-cycling this appliance.
- When the appliance is to be scrapped, cut off the power supply cable and make the door closing device unusable to prevent young children from being trapped inside.
- Help to keep your country tidy - use authorised disposal sites for your old appliance.

Description of the appliance

1. Water hardness adjustment
2. Levelling spacers
3. Upper basket stop
4. Salt container
5. Large filter
6. Detergent dispenser
7. Control panel
8. Rating plate
9. Rinse aid dispenser
10. Central filter
11. Lower spray arm
12. Upper spray arm
13. Upper basket
14. Worktop

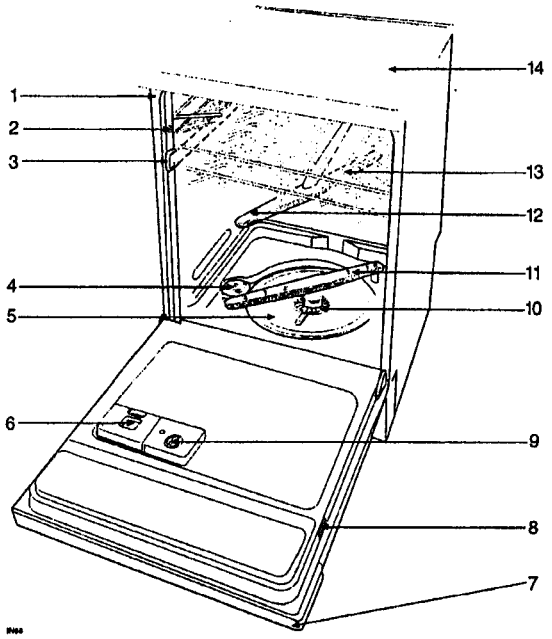

The control panel

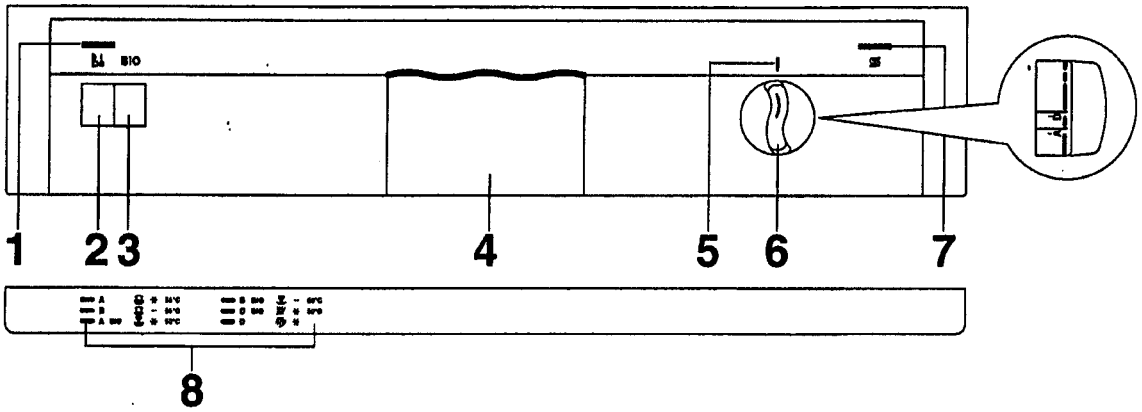

1. **On/Off indicator light**
2. **On/Off push button**
3. **"BIO" push button**
4. **Door handle**
5. **Programme marker**
6. **Programme selector dial**
7. **Salt refilling indicator light**
8. **Programme guide**

Before use

Before using your dishwasher for the first time:

1. Ensure that the electrical and water connections comply with the installation instructions
2. Remove all packaging from inside the appliance
3. Set the water softener
4. Pour 1 litre of water inside the salt container and then fill with salt
5. Fill the rinse aid dispenser.

Setting the water softener

The dishwasher is equipped with a water softener designed to remove minerals and salts from the water supply, which would have a detrimental or adverse effect on the operation of the appliance.

The higher the content of these salts, the harder your water is.

Water hardness is measured in equivalent scales, German, French degrees and PPM (parts per Million).

The softener should be adjusted according to the hardness of the water in your area. Your local Water Authority can advise you on the hardness of the water in your area.

The dishwasher is factory set at level 2.

If this level is not suitable for your area the softener should be adjusted.

Water hardness			Level	Use of salt
German degrees (°dH)	**French degrees** (°TH)	**PPM** (Parts per Million)		
0 - 4	0 - 8	0 - 80	0	NO
5 - 11	9 - 20	81 - 200	1	YES
12 - 22	21 - 40	201 - 400	2	YES
23 - 34	41 - 60	401 - 600	3	YES
35 - 50	61 - 90	601 - 900	4	YES
51 - 67	91 - 120	901 - 1200	5	YES

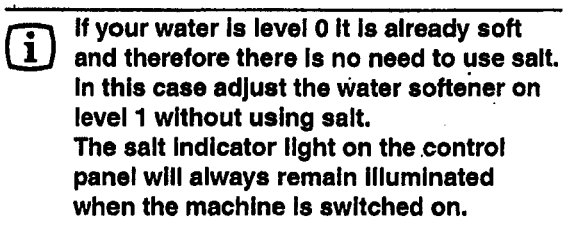

If your water is level 0 it is already soft and therefore there is no need to use salt. In this case adjust the water softener on level 1 without using salt.
The salt indicator light on the control panel will always remain illuminated when the machine is switched on.

To adjust the water softener

With a screwdriver turn the selector on the upper front corner of the machine until the level required corresponds with the marker.

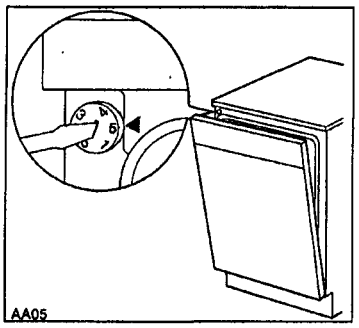

Filling with salt

Only use salt specifically designed for use in dishwashers.
All other types of salt not specifically designed for use in a dishwasher, especially table salt, will damage the water softener.

Only fill with salt just before starting one of the complete washing programmes. This will prevent any grains of salt or salty water, which may have been spilled, remaining on the bottom of the machine for any period of time, which may cause corrosion.

To fill:

1. To fill with salt, unscrew the cap of the salt container.
2. **Pour 1 litre of water inside the container (this is necessary only before filling with salt for the first time).**
3. Using the funnel provided, pour in the salt until the container is full.
   Do not worry if water over flows from the unit when filling with salt, this is quite normal.
4. Replace the cap making sure that there is no trace of salt on the screw thread or on the gasket.
5. Screw on the cap tightly.

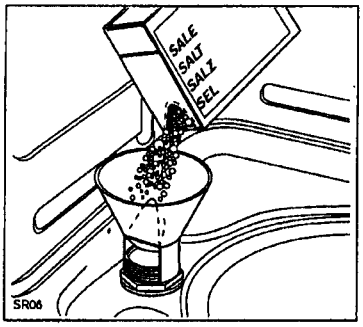

The salt container will require topping up periodically.

You are reminded of this by the salt indicator light on the control panel which comes on when the salt has finished.

The salt indicator light on the control panel can remain illuminated for 2-6 hours after the salt has been replenished, assuming the dishwasher remains switched on. If you are using salts that take longer to dissolve then this can take longer. The function of the machine is not affected.

Rinse aid

Rinse aid is automatically added during the last rinse, ensuring thorough rinsing, and spot and streak free drying. The dispenser, which is positioned inside the door, holds about 110 ml of rinse aid, which is sufficient for 16 - 40 dishwashing programmes, depending upon the dosage setting.

Filling with rinse aid

1. Open the container by turning the lid (A) anticlockwise.
2. Add the rinse aid until the container is completely full. The indicator (B) will be completely dark.
3. Top up the rinse aid when the indicator (B) becomes clear.

Ensure that the lid is closed after every refill.

Do not put liquid detergent in the rinse aid compartment. Clean up any rinse aid spilt during filling with an absorbent cloth to avoid excess foaming during the next wash.

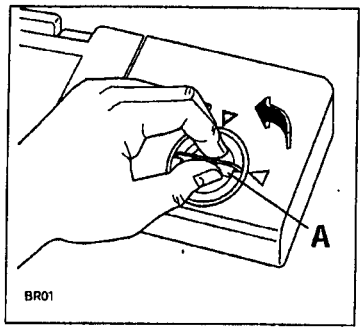

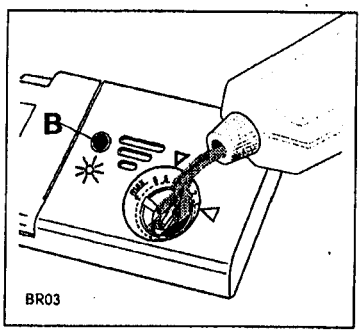

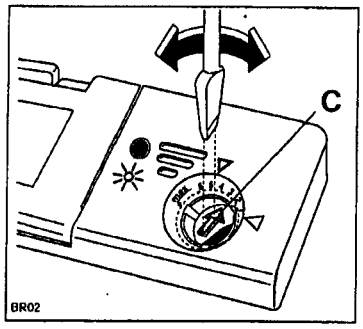

Adjusting the dose

According to the finish and drying results obtained, adjust the dose of rinse aid by means of the 6 position selector (C) (position 1 minimum dosage, position 6 maximum dosage).

Start from position 3.

Gradually increase the dose if there are drops of water or lime spots on the dishes after washing. Reduce it if there are sticky whitish streaks on the dishes.

Using your appliance

Loading your appliance

Before placing dishes in the machine, remove any scraps of food, to avoid clogging the filters and consequently reducing the performance.

Do not load very small items which can fall through the baskets.

Open the door and slide out the baskets to load the dishes.

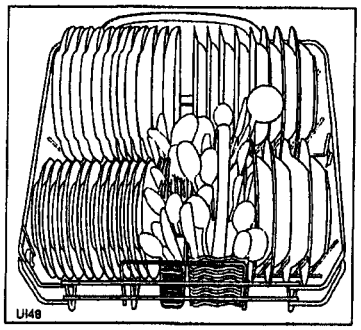

The lower basket

The lower basket is designed to take saucepans, lids, plates, salad bowls, cutlery etc.

Serving dishes and large lids should be arranged around the edge of the basket, ensuring that the upper spray arm can turn freely.

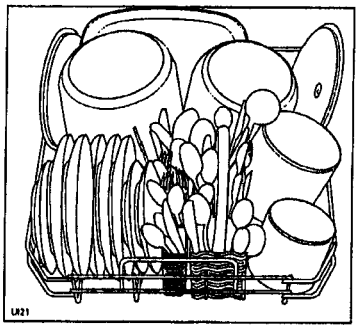

The two rear rows of prongs on the lower basket can be easily lowered to allow you to load pots, pans and bowls.

To lower the prongs:

- Slightly pull them upward and let them drop down (see picture).
- To bring them back to the standing position, just pull them up again.

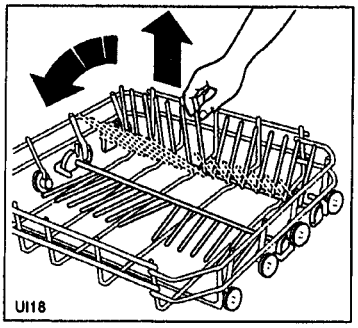

The cutlery basket

Long bladed knives stored in an upright position are a potential hazard.
Long and/or sharp items of cutlery such as carving knives must be positioned horizontally in the upper basket.
Take care when loading or unloading sharp items such as knives.

Cutlery should be placed in the removable cutlery basket with the handles facing downwards. If the handles protrude from the bottom of the basket, obstructing the lower spray arm, load the cutlery with the handles facing upwards.

Mix spoons with other cutlery to prevent them from sticking together.

The cutlery basket is in two parts which can be separated to give greater loading flexibility. To separate the two parts, slide them horizontally in opposite directions and pull them apart. To reassemble, reverse the procedure.

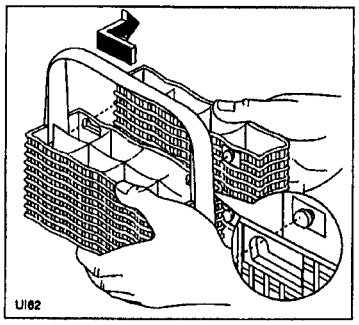

The upper basket

The upper basket is designed for plates (dessert plates, saucers, dinner plates of up to 24 cm in diameter), salad bowls, cups and glasses.

Arrange items on and underneath the fold-down cup racks so that water can reach all surfaces.

Light items (plastic bowls etc.) should be loaded in the upper basket and arranged so they do not move.

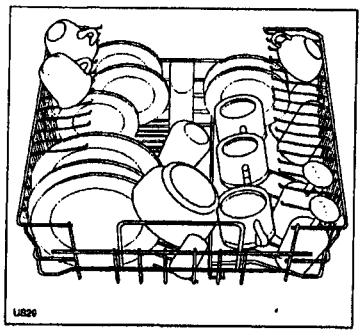

Before closing the door, ensure that the spray arms can rotate freely.

Adjusting the height of the upper basket

If washing very large plates (over 27 cm and up to 31 cm in diameter) you can load them in the lower basket after moving the upper basket to the higher position.

To move to the higher position proceed as follows:

1. Move the front runner stops (A) of the upper basket outward and slide the basket out.
2. Refit the basket in the higher position and replace the stops (A) in their original position.

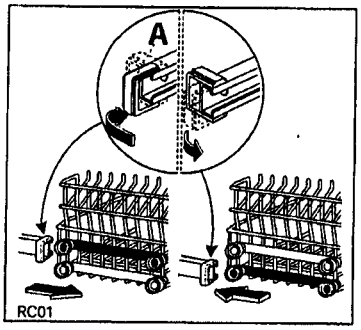

When the top basket is in the higher position it will only take plates up to 20 cm in diameter and you will not be able to use the raised cup racks.

After loading your machine always close the door, as an open door can be a hazard.

Use of detergent

Only use detergents specifically designed for use in dishwashers.

If using powder detergents proceed as follows:

1. Open the dispenser lid by pulling the catch (D).
2. Add the detergent according to the recommended quantity given in the "Washing programmes" chart. As all detergents are not the same, you should consult the instructions on the packet.
3. Always close the lid.
4. If the programme has a prewash add the required detergent over the lid of the dispenser. Follow the recommended quantity of detergent given in the "Washing programmes" chart.

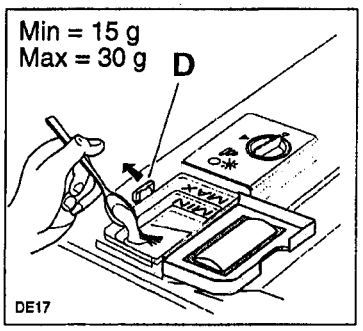

If using detergent in tablets proceed as follows:

1. For all programmes; place 1 tablet inside the detergent dispenser.
2. Always close the lid.
3. For all programmes with prewash; place a portion of a further tablet on the lid of the detergent dispenser.

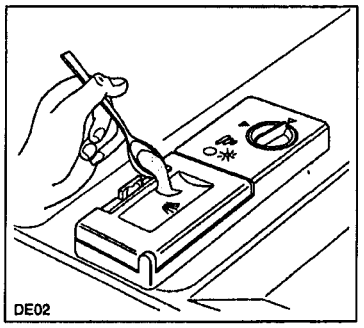

Insufficient quantities of detergent will produce poor washing results, whereas an excessive amount of detergent will not improve washing results and is also wasteful.
Using no more than the correct amount also contributes to reducing pollution.

Compact detergents with enzymes

In these compact powders the environmentally unfriendly components have been replaced by natural enzymes and other more biodegradable substances.

The enzymes deploy their full dirt dissolving power at a temperature as low as 50°C.

By choosing the "Bio" programmes you can therefore achieve the same cleaning results that would otherwise be achievable only with 65°C programmes and conventional detergents.

These new compact powders are generally phosphate-free.

Hints and tips

To save energy

Place dishes in the machine immediately after every meal and wait until the dishwasher is full before washing.

If necessary run the Rinse and Hold programme (see "Washing Programmes" chart) so that any food scraps do not become caked on the dishes while you are waiting to run the complete wash programme.

Do not prewash dishes under running water.

For best washing results

Before loading, remove all scraps of food and soak very heavily soiled pots and pans.

Arrange saucepans, cups and glasses etc. upside-down.

Tilt items with convex or concave surfaces so that the water drains off easily.

Avoid contact between the dishes as far as possible.

Items not suitable for dishwashers

The following items should not be washed in the dishwasher (unless they are sold as dishwasher proof):

- Cutlery with wooden or horn handles or glued parts
- bronze cutlery
- saucepans with wooden handles
- aluminium ware
- crystal ware
- leaded glass
- plastic items
- antique or fine decorated china

Certain types of decoration can discolour when washed in a dishwasher.

Crystal-ware and plastic objects, if not guaranteed dishwasher proof should be washed by hand.

Certain types of glass can also become opaque after being washed several times in a dishwasher.

A chemical reaction can occur between silver cutlery and stainless steel cutlery. As a precaution, do not wash together.

Iron and cast iron objects can rust and stain other items.

Aluminium tends to go black, copper, pewter and brass tend to stain.

If in doubt check with manufacturer of the item.
When buying new dishes, ensure that they are dishwasher proof.

Washing programmes

Programme	Degree of soil and type of load	Starting position of the programme selector	Required push buttons	Recommended quantity of detergent		Cycle description
				wash	prewash	
Normal 65°C with prewash	Normal soil. Crockery and cutlery	**A**	**65 + On/Off**	25 g	5 g	Cold prewash Main wash up to 65°C 1 cold rinse 1 hot rinse Drying
Normal 65°C no prewash	Light soil. Crockery and cutlery	**B**	**65 + On/Off**	25 g	/	Main wash up to 65°C 1 cold rinse 1 hot rinse Drying
*** BIO 50°C with prewash**	Normal soil. Crockery and cutlery	**A**	**BIO + On/Off**	25 g	5 g	Cold prewash Main wash up to 50°C 1 cold rinse 1 hot rinse Drying
*** BIO 50°C no prewash**	Light soil. Crockery and cutlery	**B**	**BIO + On/Off**	25 g	/	Main wash up to 50°C 1 cold rinse 1 hot rinse Drying
**** Quick 50°C**	Light soil. Crockery and party crockery	**C**	**BIO + On/Off**	25 g	/	Main wash up to 50°C 1 cold rinse 1 hot rinse
Rinse and Hold	Any. Partial load (to be completed later in the day).	**D**	**On/Off**	/	/	1 cold rinse, (to avoid food scraps from sticking together).

* Testing programme for EN 50242 (see "Hints for Test Centres").

** This is a special programme for quick washing a full load of lightly soiled dishes, glasses and crockery (except pots) so that you may re-use them promptly.

Operating sequence

1. Check the filters

Ensure they are clean and properly positioned (see "Maintenance and cleaning").

2. Check that there is rinse aid and salt

3. Load the dishes

Remove any scraps of food.

Pull the lower basket out and arrange the saucepans, plates and cutlery in it.

Pull the upper basket out and arrange the plates, saucers, glasses and cups etc. in it.

Slide the baskets back into the machine.

4. Ensure that the spray arms can rotate freely.

5. Measure out detergent

Add the required amount of detergent into the dispenser according to the dosage instructions from the manufacturer of your brand.

Close the detergent dispenser lid.

6. Close the dishwasher door

7. Set the programme

Turn the programme selector dial clockwise until the letter of the programme you wish to select corresponds with the programme marker on the control panel.

8. Start the programme

Depress the On/Off push button.

The On/Off indicator light will come on and the machine will start.

9. At the end of the washing programme

At the end of the programme the dishwasher will automatically stop.

The On/Off indicator light remains on until the On/Off push button is depressed.

10. Switch off the dishwasher

Switch off the dishwasher by pressing the On/Off push button and open the door.

Wait a few minutes before removing the dishes; in this way they will be cooler and the drying will be improved.

Empty the lower basket first and then the upper one; this will avoid water dripping from the upper basket onto the dishes in the lower one.

When the washing programme has finished, it is recommended that the dishwasher is unplugged and the water tap turned off.

In general it is not advisable to open the door while the machine is working; if the door is opened however, a safety device ensures that the machine stops.

Important!
Care must be taken if the door is opened during the hot phase or immediately after a programme has finished, as steam may escape.

Maintenance and cleaning

Internal cleaning

Ensure that the seals around the door, the detergent and rinse aid dispensers are cleaned regularly with a damp cloth.

We recommend every 3 months to run a 65°C wash programme without dishes using detergent.

Cleaning the central filter

(After each wash)

Scraps of food may accumulate in the drain filter (A) and should be removed by rinsing the filter under running water.

To remove the drain filter

- simply pull it out by the handle.

Once cleaned, refit the filter by pushing it back to its original position until it engages.

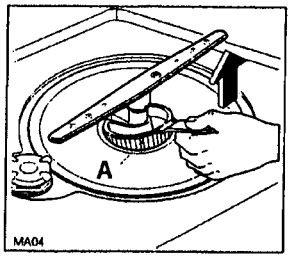

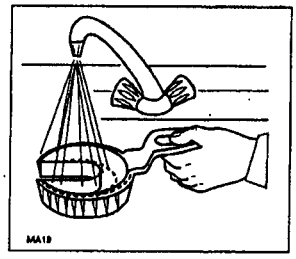

Cleaning the large filter

(Every month)

If necessary clean the large filter (B) on both sides under running water, using a brush.

To remove the large filter

1. Remove the spray arm by pulling it upwards on one side.
2. Turn the column (C) anticlockwise by 90° and then slide out the filter.
3. Once cleaned refit it following the above instructions in reverse order.
4. Ensure the filter is in its original position, the handle of the drain filter should be pointing towards the front of the appliance.

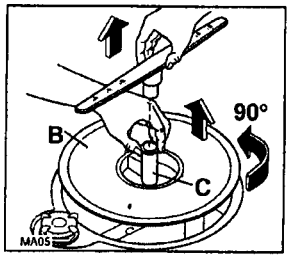

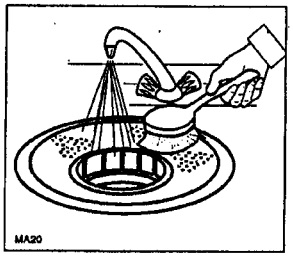

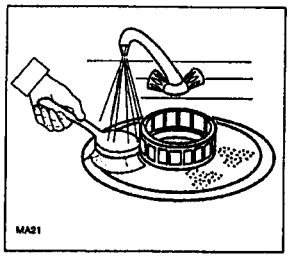

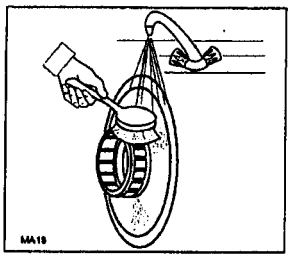

The dishwasher must not be used without filters.
Incorrect repositioning and fitting of the filters will produce poor washing results.
Cleaning the filters is vital to ensure correct operation of the machine.

External cleaning

Clean the external surfaces of the machine and control panel with a damp soft cloth. If necessary use only neutral detergents. Never use abrasive products, scouring pads or solvent (acetone, trichloroethylene etc....).

Prolonged periods of non-operation

If you are not using the machine for any period of time you are advised to:

1. Unplug the appliance and then turn off the water.
2. Fill the rinse aid dispenser.
3. Leave the door ajar to prevent the formation of any unpleasant smells.
4. Leave the inside of the machine clean.

Frost precautions

Avoid placing the machine in a location where the temperature is below 0°C. If this is unavoidable, empty the machine, close the appliance door, disconnect the water inlet pipe and empty it.

Moving the machine

If you have to move the machine (moving house etc....):

1. Unplug it.
2. Turn the water tap off.
3. Remove the water inlet and discharge hoses.
4. Pull the machine out together with the hoses.

Avoid over tilting the machine during transportation.

Something not working

Certain problems are due to lack of simple maintenance or oversights, which can be solved easily without calling out an engineer.
Before contacting your local Service Force Centre, please carry out the checks listed below.

Symptom	Solution
The machine will not start	• The door has not been properly closed. • The plug is not properly inserted in the power socket. • There is a power failure.
The machine does not fill with water	• Ensure the water tap is open. • Ensure the mains water supply has not been cut off. • The inlet hose may be squashed or bent. Reposition the hose. • The inlet hose may be blocked. Switch off the water supply and clean the filter.
The filters are blocked	• Clean the filters (refer to "Maintenance and cleaning").
The spray arms are not rotating	• Ensure the crockery is loaded correctly.
The dishwasher will not drain	• The drain hose may be squashed or bent. Reposition the hose. • The sink may be blocked. Clear any blockages. • The drain hose extension is not correct. Follow the instructions for connecting to the waste. • There is no vent in the end of the drain hose.
The machine is noisy	• Dishes are rattling against each other, refer to "Loading your machine". • The spray arms are knocking against the dishes. Refer to "Loading your machine".
The door is difficult to close	• The dishwasher is not level, or not properly built-in.
Visible lime deposits or white film on the dishes	• Check that there is salt and that the salt cap is tight. • Check that the right level of the water softener is setted.
The dishes are not quite dry	• The rinse aid has run out or too little is being used.
The dishes are not clean (poor wash)	• The baskets are too full. • The dishes have not been arranged properly. • The spray arms do not rotate • The spray arms are clogged. • The filters are clogged. • The filters are not in the correct position. • Not enough detergent has been used or it is unsuitable. • The detergent is old or has gone hard. • The salt container cap is not properly closed. • The washing programme selected is too gentle.

If after all these checks, the problem persists, contact your local Service Force Centre, quoting the model and serial number. This information can be found on the rating plate located on the right hand side of the dishwasher door (see picture).

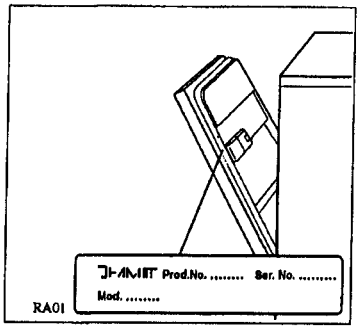

Protection against flooding

In order to prevent water floods, the machine has been provided with two additional devices, having the following characteristics:

1. In the water inlet hose (see "Water supply connections"). The device comes into operation as a result of any damage to the water inlet hose and stops the water inflow. It functions even with the machine off.
2. In the bottom of the machine: the device comes into operation as a result of any water leaks in the machine and it functions only with the machine on.

To repair the machine call the Service Centre.

Service and spare parts

This product should be serviced by an authorised Service engineer, and only genuine spare parts should be used.
Under no circumstances should you attempt to repair the machine yourself.
Repairs carried out by inexperienced persons may cause injury or serious malfunctioning. Contact your local Service Force Centre.
Always insist on genuine spare parts.

Hints for test centres

Before starting any test it is necessary to fill completely with salt the salt container and with rinse aid the rinse aid dispenser.

Test standard	EN 50242
Reference programme:	Bio 50°C with prewash
Load:	12 standard place settings
Rinse aid selector:	position 5
Detergent dosage :	25 g in the dispenser 5 g on the dispenser lid

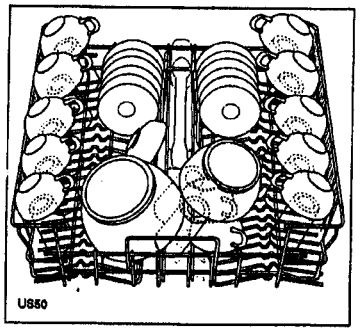

Arrangement
upper basket

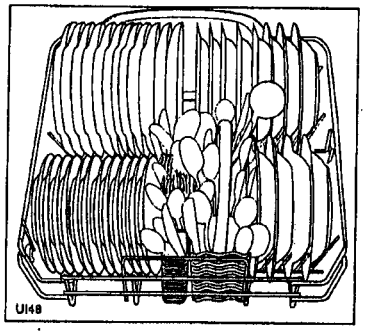

Arrangement
lower basket

Technical specifications

DIMENSIONS	Width Height with worktop Height without worktop Max depth Max depth with open door	60 cm 85 cm 82 cm 61cm 115,2 cm
ELECTRICAL CONNECTION MOTOR RATING DURING WASH POWER OF HEATING ELEMENT OVERALL POWER	Voltage	220/230 V - 50 Hz 200 W 2100 W 2300 W
WATER SUPPLY PRESSURE	Minimum Maximum	50 kPa (0.5 bar) 800 kPa (8 bar)
CAPACITY		12 place settings

Installation instructions

Remove all packaging before positioning the machine.

If possible, position the machine next to a water tap and a drain.

Water supply connections

This dishwasher may be fed with either hot (max. 60°) or cold water.
Nevertheless we advise you a cold water supply.
A hot water supply is not always efficient with very soiled crockery as it shortens the washing programmes a lot.

The water pressure must be within the limits given in the technical specifications.

Your local Water Authority will advise you on the average mains pressure in your area.

The dishwasher features fill and drain hoses which can be turned either to the left or the right to suit the installation.

The locknut must be correctly fitted to avoid water leaks.

Avoid bends or kinks in the hose which could prevent or slow down the water supply.

If the machine is connected to new pipes or pipes which have not been used for a long time, you should run the water for a few minutes before connecting the inlet hose. This will prevent deposits of sand or rust clogging the inlet hose filter.

For making the connection itself, the coupling nut fitted to the machine's supply hose is designed to screw onto either a 3/4 inch gas thread spout, or to a purpose made quick-coupling tap such as the Press-block.

The water supply hose is fitted with a safety device, which prevents water from entering the machine should the inner hose split, due to wear.

The problem is signalled by a red indicator which appears in the window (B - ① ②).
If this happens, close the water tap and have the hose replaced.

The retaining ring (A - ① ②) must be properly fitted so as to avoid water leaks.

Note:
Only for water supply hoses with Lock-fast safety device to prevent inadvertent loosening.
To detach the hose press yellow lever (C - ②) and turn the retaining ring anticlockwise ②.

⚠ **Any electrical work required to install this appliance should be carried out by a qualified electrician or competent person.**

Any plumbing work required to install this appliance should be carried out by a qualified plumber or competent person.

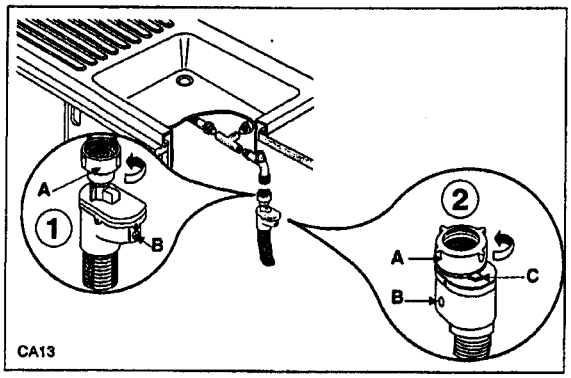

Water outlet hose connection

The end of the drain hose can be connected in the following ways:

1. To the sink outlet siphon, securing it if necessary with a clip.
2. Hooked over the edge of the sink using the special curved plastic guide provided.
3. To a stand pipe provided with vent-hole, minimum internal diameter 4 cm.

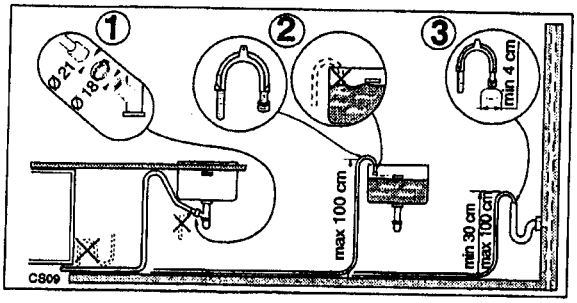

The waste connection must be at a height of between 30 cm (minimum) and 100 cm (maximum) from the bottom of the dishwasher.

The drain hose can face either to the right or left of the dishwasher

Ensure the hose is not bent or squashed as this could prevent or slow down the discharge of water.

If you use a drain hose extension it must be no longer than 2 metres and its internal diameter must be no smaller than the diameter of the hose provided.

Likewise the internal diameter of the couplings used for connections to the waste outlet must be no smaller than the diameter of the hose provided.

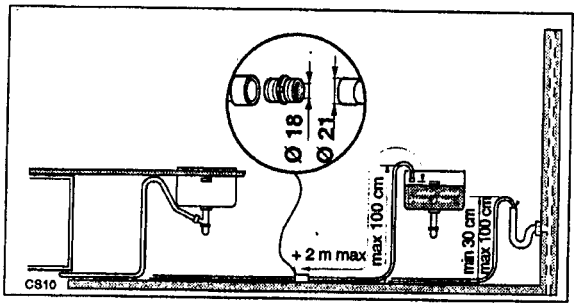

The sink plug must not be in place when the machine is draining as this could cause the water to siphon back into the machine.

Electrical connection

Before plugging the appliance into the wall socket, make sure that:

1. The mains voltage corresponds to the voltage given in the "Technical specifications".
2. The meter, fuses, mains power supply and wall socket can all take the maximum load required. Make sure that the socket and plug are compatible without having to use any type of adaptor. If necessary, have the domestic wiring system socket replaced.

⚠ **Safety standards require the appliance to be earthed.**
The manufacture accepts no liability for failure to observe the above safety precautions.

CE **This appliance complies with the following E.E.C. Directives:**
- 73/23 of 19.2.73 (Low Voltage Directive) and subsequent modifications;
- 89/336 of 3.5.89 (Electromagnetic Compatibility Directive) and subsequent modifications.

Adjusting the worktop

You can move the worktop forward or backward by 25 mm in order to align the machine with other kitchen units.

Simply unscrew the two rear retaining screws, move the top to the required position and then retighten the screws.

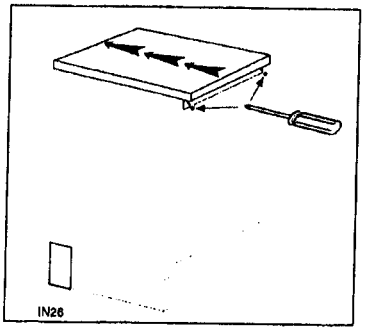

Fitting under a counter
(kitchen worktop or sink)

By removing the machine's worktop, you can install it under a close fitting sink unit or a pre-existing top, providing the dimensions of the recess correspond to those shown in the picture.

Proceed as follows:

- Remove the machine's worktop by unscrewing the two rear retaining screws, pull from the front and slide out the rear slots, lifting the worktop.

Insert the machine after adjusting height and levelling with the adjustable feet. When inserting the machine, ensure that the water inlet and drain hoses are not kinked or squashed.

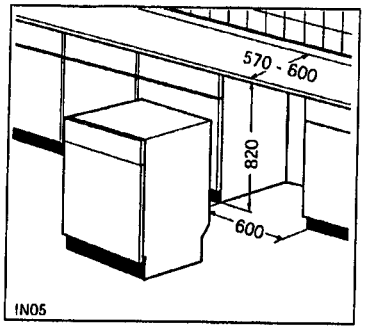

Levelling

Good levelling is essential for correct closure and sealing of the door.

When the appliance is correctly levelled, the door will not catch on the levelling spacers on either side of the cabinet.

If the door does not close correctly, loosen or tighten the adjustable feet until the machine is perfectly level.