Railhead Operations

Training Guide

Railhead Operations

Pre-operational

Part 1

Importance of Rail Transportation

- Rail transport is essential for the shipment and deployment of oversize and overweight equipment. It is also essential for the land deployment of all equipment transported farther than 400 miles. When many items are to be shipped, rail transport is often cheaper than highway transport.
- Rail transport of tactical vehicles reduces the time the vehicles must operate during deployment and places them in the front lines in top operational condition. Rail transport reduces wear and tear on vehicles, minimizes en-route support, and reduces maintenance.

NOTE: Although oversize and overweight equipment is routinely transported by rail, there are maximum limits and restrictions to rail transport. When railcar-mounted equipment exceeds the clearances, special provisions may be required.

What is a Railhead?

A location where vehicles and equipment will be loaded or unloaded.

What type of facilities are normally at a railhead?

Staging Area

Railroad track(s) with ramp(s)

Life Support Area

Maintenance support area/wrecker parking

Railhead Flow Chart

Personnel Traffic

Vehicle/Equipment Traffic

Staging Areas

- Staging areas can be found in different conditions that ranged from unimproved ground with gravel to perfectly leveled asphalt or concrete surfaces hooked up to POL separators.

- Depending on the existing conditions the mission accomplishment may be impaired in certain ways (i.e. increased slipping/tripping hazards caused by gravel, potholes, snow and ice).

- These factors must be considered in the risk assessment prior to mission execution.

- Vehicles/equipment parked in staging areas must be properly secured with chock blocks and equipped with drip pans to prevent POL spills.

Loading Ramps

- Loading ramps can be found found in different conditions and types that ranged from old cobblestone surfaces with one head ramp and damaged concrete ramps to perfectly leveled concrete surfaces with up to two head ramps and side loading ramps.

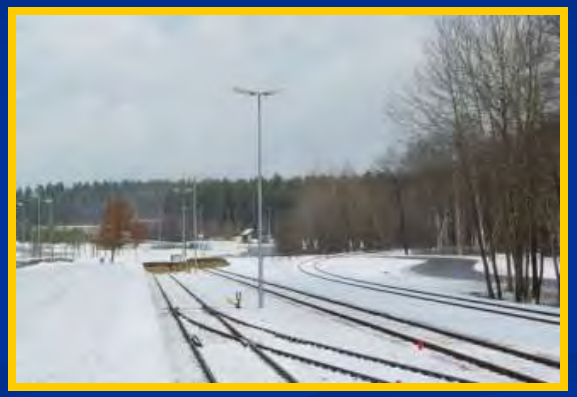

- Special consideration should be given to railheads equipped with overhead power lines. A close coordination with the Host Nation railway officials through the local Movement Control Team is mandatory to ensure that the overhead power lines have been shut off and grounded in the work area.
- Some railheads are located off post and will be co-used by host nation military forces and civilian agencies. This will create additional safety and security problems during operations due to civilian and military traffic. This may impact the mission accomplishment and need to be considered in the risk assessment prior to mission execution.

Life Support Facilities

- Life support facilities/services (warm up tents with food/beverages, latrines, medical support) play a vital role in a successful mission accomplishment during operations performed in cold/inclement weather conditions. All active sites must comply with the required standards and provide the above listed facilities/services.

Railhead Lighting

- Night operations and inclement weather conditions increase the risk of accidents and injuries due to limited visibility. All active sites must have adequate lighting provided to enable the units to perform safe night operations the lighting consists mainly of fixed floodlights and can be supported by mobile light sets at remote areas.

PRE-OPERATIONAL REQUIREMENTS

Unit Commander

Train Commander

Transportation Officer

Railhead OIC/NCOIC

All Personnel

Vehicle operators

Unit Commanders will ensure:

- Key railhead personnel are certified through the Railhead Operations Training and Verification Program.
- Personnel conduct risk assessments of the railhead site, and staging areas considering common risk factors.
- That a safety officer or a safety NCO is appointed.
- Soldiers are briefed and instructed on the safety standards and procedures in AE Pam 385-15-2.
- Safety equipment (i.e., reflective vests, hard-hats, flashlights), supervisory personnel (OIC/NCOIC) and ground guides are available.
- Medical support is available at loading and unloading sites.
- Safety standards are monitored and enforced.
- Participants are shown the location of high-voltage lines, in-service tracks, switches and other hazardous locations/equipment in the work area.
- Protection from cold or inclement weather is provided.

Safety briefings and training

Safety briefings and proper training are prerequisites for a successful and accident free mission completion.

Train Commanders will ensure:

- **Military units and organizational personnel have been –**
  - **Briefed on regulatory requirements before each rail movement.**
  - **Made aware of unsafe conditions in the railhead area.**
  - **Told to keep a safe distance from electric power lines and systems in the work area.**
- **Supervisors are aware that when overhead power lines are switched on temporarily for technical reasons--**
  - **Operations must cease!**
  - **The area must be cleared of personnel.**
  - **Operations will not resume until the appropriate railway authority (i.e. *Deutsche Bahn* AG in Germany) confirms that electricity has been shut off and grounded in the railhead area. (*Note: Electrified rail systems with overhead power lines and feeder lines installed beside rail tracks carry 15,000 volts or more.*)**
  - ***While supplies are moved, escorts may not ride in freight cars or vehicles loaded on railcars.***

Transportation Officers or Representatives will:

- Coordinate with the responsible railway official and confirm that electric overhead power lines have been shut off and grounded in the railhead work area. Under no circumstances will operations start until confirmation is received.
- Keep units informed of changing conditions.
- Enforce the rules of conduct for ensuring safe operations.
- Make soldiers aware of warning signs posted in the local work area and affixed to railway equipment.
- Ensure that in the presence of overhead power lines equipment with steps or stepladders extending higher than 2 meters above the rail car surface will be avoided.

Railhead OIC/NCOIC will:

- Confirm that electric overhead power lines have been shut off and grounded in the railhead work area. Under no circumstances will operations start until confirmation is received.
- Confirm blocking/bracing, securing materials and tools are in good working condition and the necessary amount is present (see slides).
- Ensure railcars are free of debris, snow and ice.
- Ensure there is enough lighting at the railhead site.
- Ensure medical support is onsite before operations begin.
- Ensure drinking water and rations are available to all personnel on the railhead site.
- Keep units informed of changing conditions.
- Enforce the rules of conduct for ensuring safe operations.
- Ensure soldier support facilities are available (warming tents, latrines, mess area).

Recommended tools

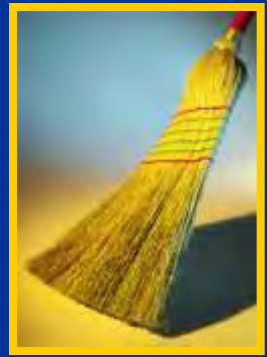

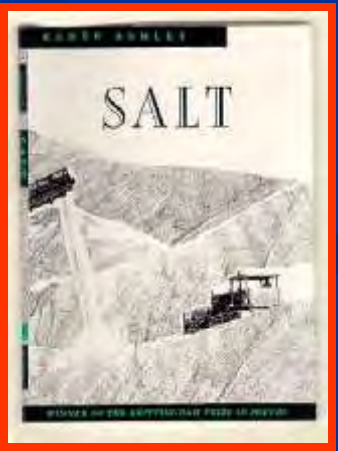

Additional tools for winter operations

Blocking and Tie-down Material

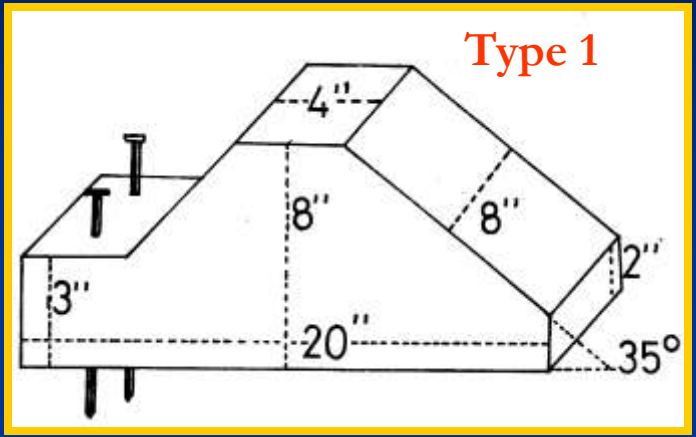

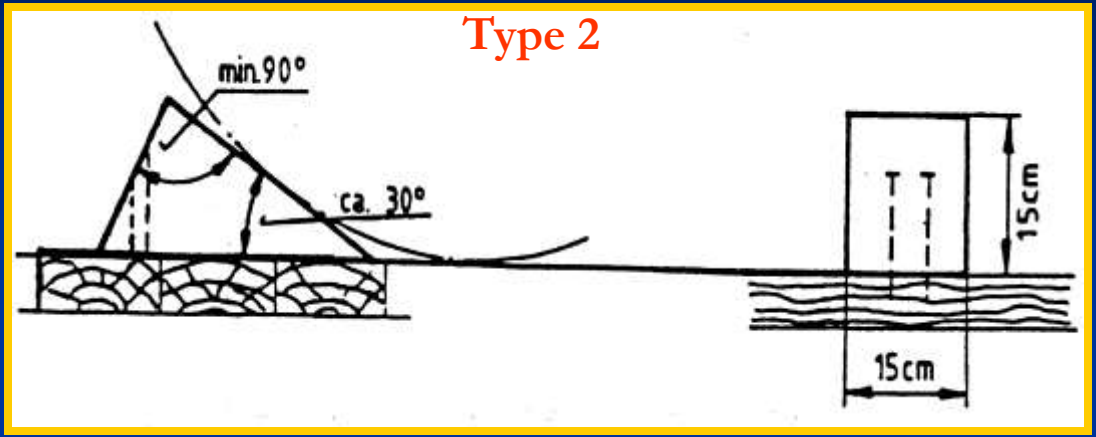

Wooden chock blocks for wheeled vehicles

Wooden chock blocks

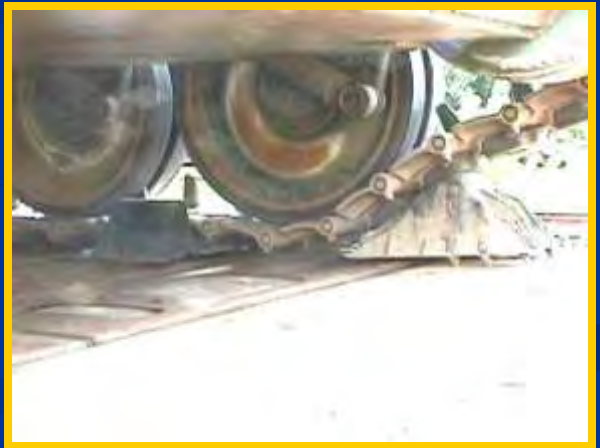

Metal chock blocks for tracked vehicles

Blocking and Tie-down Material

Build-in metal chock blocks

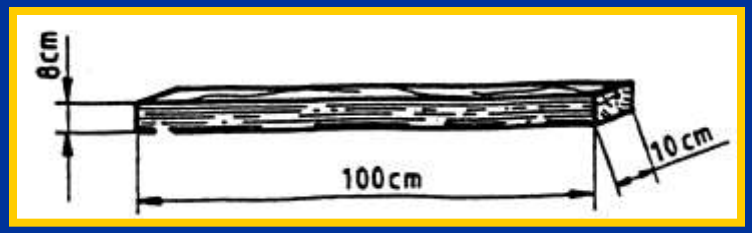

Wooden board

Blocking and Tie-down Material

Shackle

Turnbuckle

Wire rope with clamps

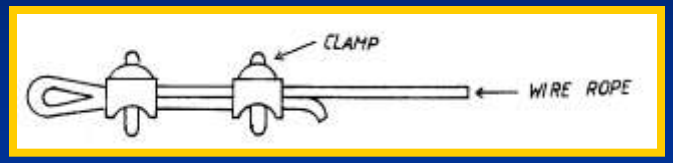

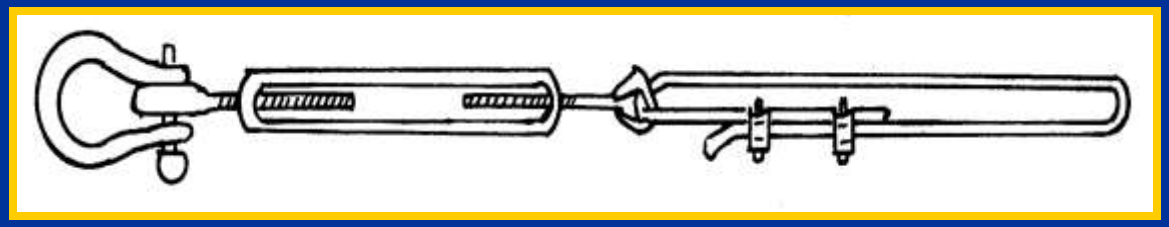

Tie-down assembly

Tie-down strap

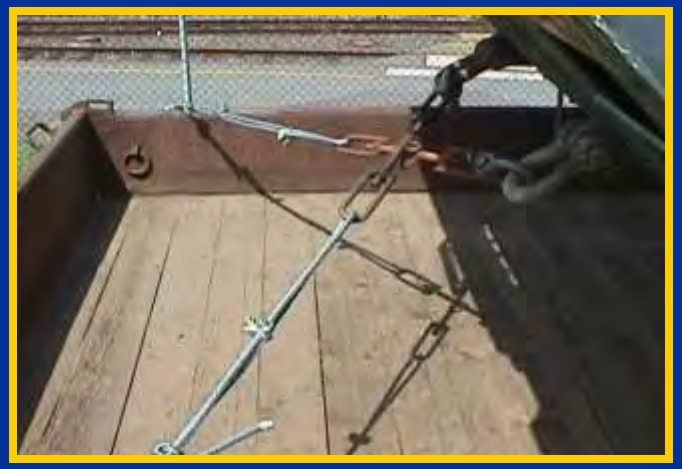

Tie-down cables

Tie-down straps

Blocking and Tie-down Material

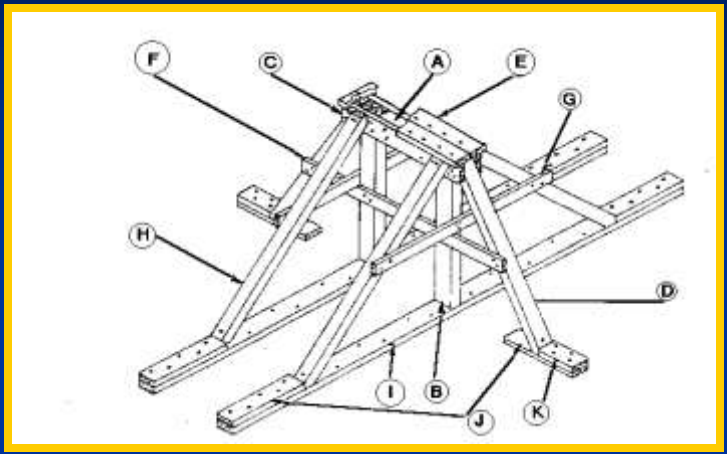

Stanchion for trailer

Securing gun tube with chains

Securing gun tube with cables

All Personnel will:

- Wear Kevlar helmets or OSHA-approved hardhats.
- Wear leather or work gloves when handling chains, wire ropes, blocking, tools, or any other form of bracing material.
- Be equipped with reflective vests or belts and flashlights/chemical lights during darkness.
- Not work or walk on top of unloaded vehicles without specific permission from the OIC or NCOIC. *This will apply even when no overhead line is installed above the tracks. Only the OIC or NCOIC may declare an area safe from electrical hazards.*
- Be informed that the local transportation representative in charge of rail uploading or downloading is the only person authorized to inform Host Nation supervisors when railcars may be moved. *The transportation representative will be the only person wearing a white armband.*

Proper Personal Protective Equipment

Kevlar or OSHA-approved hardhat

Reflective vest or belt

Eye protection

Leather or work gloves
(not wool inserts)

Hearing protection

Flashlights or chemical lights
for ground guides

Vehicle operators will:

- Thoroughly clean equipment, remove all dirt and oil.
- Check fuel levels: *Vehicles ¾ full.*
  Trailer mounted equipment ½ full.
- Remove and secure all sensitive/classified items.
- Reduce vehicle length, height and width by folding in mirrors, removing storage baskets, etc.
- Secure rotating parts to prevent from moving.
- Ensure all vehicles and trailers are equipped with serviceable tie down devices or shackles. Remove "T Hooks" from combat vehicles and replace with screw pin shackles.
- Protect radios, radio mounts and other electronic components on vehicles to prevent corrosion damage. Cover with plastic, secure or remove and containerize.

Vehicle operators will: (continued)

- Box and/or store on-vehicle equipment (OVE). When possible, ship with vehicle in locked OVE box.
- Do not cover headlights, reflectors, windshields or mirrors with tape. This does little to protect from damage and becomes a safety issue during loading and unloading operations.
- Remove whip antennas from vehicles before entering a rail-loading site. *Antennas will not be remounted until vehicles are in the staging area away from electrical hazards.*
- Before backing up in non-tactical areas, drivers of all types of vehicles will sound their horn.
- Do not move a vehicle without a ground guide.

Railhead Operations

Associated hazards

and

Control measures

Conduct operations in adverse weather conditions.

Cold weather injuries, rainstorms, or high/gusty winds.

- **Pre-designate Go/No Go weather conditions.**
- **Brief all soldiers on inclement weather procedures and cold weather injury prevention.**
- **Provide warm-up areas, drinking water and proper work/rest cycles.**
- **Determine wind chill factor.**

Hot weather injuries.

- **Brief all soldiers on hot weather injury prevention.**
- **Provide shaded areas, drinking water and proper work/ rest cycles.**
- **Obtain daily weather forecast and post heat index.**

Movement of non-operational vehicles from marshalling area to staging area at railhead.

Non-operational vehicles improperly handled.

- **Provide NATO/U.S. slave cables and power source to start vehicles.**
- **Provide an emergency-towing vehicle/line haul assets for non-operational vehicle.**

Driving AMVs to include oversized equipment from marshalling area to staging area at railhead.

Unlicensed/untrained drivers to include Local National drivers assigned to operate military vehicles.

- **Ensure all military drivers are licensed to operate assigned vehicles and Local National drivers are trained to operate the military vehicles they drive.**

Driving AMVs to include oversized equipment from marshalling area to staging area at railhead.

Personal injury and equipment damage caused by AMV.

- **Enforce speed limit.**
- **Ensure AMVs are ground guided in the marshalling area and in all congested areas (rail loading site).**

Towing operations

Loss of control of equipment due to unplanned disconnect while towing vehicle.

- **Ensure one designated person in staging area and at ramp inspect any towed equipment for pintel pins installed and safety chains hooked up prior to moving or negotiating ramp.**

Personnel working on railhead

Personnel injured during operations performed at the railhead.

- **Ensure that on site medical and hospital support is available during the entire operation.**
- **Utilize combat lifesavers with bag on site during the entire operation.**

Personnel do not have proper protective equipment (PPE) for railhead operations.

- **Ensure personnel has required PPE (kevlar helmets or ANSI hard hats, leather gloves and reflective vests).**
- **Provide hard hats for distinguished visitors (DV's).**
- **Ensure personnel is dressed appropriate to weather conditions.**

Personnel walking/working at the railhead

Person(s) struck by moving train, Army Motor Vehicle (AMV) or Material Handling Equipment (MHE).

- **Brief personnel to stay clear of tracks and train until train stops.**
- **Brief off limit areas at railhead.**
- **Ensure rail Movement Management Team (RMMT) controls all rail load operations.**
- **Ensure non-operational personnel/distinguished visitors (DVs) are escorted in the area.**
- **Enforce no running at railhead.**
- **Control vehicle access to railhead and enforce speed limit.**

Personnel walking on ramps and railcars

Person(s) slip and fall from ramp or railcar.

- **Ensure personnel maintain positive contact while on the railcar.**
- **Ensure personnel will not run on ramps/railcars.**
- **Ensure personnel will not jump from railcars.**
- **Ensure loading areas are adequately lit during periods of limited visibility.**

Driving AMVs on ramps and railcars

AMV drives off the edge of a ramp/railcar or get stuck between railcars.

- **Ensure all AMVs are ground guided onto railcars.**
- **AMV will be stopped if visual contact is lost with ground guide.**
- **Ensure spanners are available for vehicles/trailers with small tires.**

Driving AMVs on ramps and railcars

Person(s) injured or struck by AMV driving onto railcar (i.e. pinned between AMV & railcar or another AMV).

- **Ensure drivers and ground guides are both familiar with hand signals.**
- **Ensure ground guides are not on the same railcar with a moving piece of equipment (maintain at least one railcar distance).**
- **Ensure ground guides do not stand between AMVs and other equipment.**
- **Ensure ground guide will not walk backwards on railcars.**

Sling loading trailer/semi-trailer or other equipment on railcars with mobile crane

Personnel struck/injured by lifted trailers/equipment (i. e. workers pinned between trailers and other objects/railcar or hit by lifted equipment).

- **Maintain 3-meter clear zone around and under the trailer/ equipment while being lifted.**
- **Establish warning sign/sound and brief personnel on correct usage.**
- **Ensure that all work stops immediately if ANYONE releases a warning signal/sound.**
- **Use guide ropes to assist in controlling movement, brief rope use and cautions (Never wrap around hand/arm).**

Loading MILVANs from trailer/PLS onto railcars with Material Handling Equipment (MHE)

Personnel injured by moving MHE or lifted equipment (i.e. workers pinned between container and other objects/railcar, run over by MHE or hit by lifted equipment).

- **Maintain 3-m clear zone around MHE and under the container while being moved/lifted.**
- **Establish warning sign/sound and brief personnel on correct usage.**
- **Ensure that all work stops immediately if ANYONE uses a warning signal/sound.**
- **Establish operational rule that no one approaches container until it is below eye level.**

Install blocking & bracing (b&b) materials

Personnel sustain head, hand, foot, or eye injury.

- **Brief personnel on risks and hazards of rail operations.**
- **Ensure workers wear proper personal protective equipment (PPE) (hard hat, leather gloves, and eye protection).**
- **Ensure workers handle tools properly and carefully.**
- **Ensure that no horseplay is tolerated.**

Install tie-down material on railcar

Personnel sustain head, hand, foot or eye injury.

- **Brief personnel on risks and hazards of securing vehicles and equipment.**
- **Ensure workers wear proper PPE.**

Boarding of guard personnel

Person(s) sustain severe injuries while boarding a moving train.

- **Ensure <u>nobody</u> will board a moving train.**

Common European Flatbed Railcars

Kls/Kbs

Overall length: 13.9 meters
Total loading length: 12.5 meters
Loading width: 2.77 meters
Maximum load weight: 27 M/T
Average weight of railcar: 12.5 M/T

Rs

Overall length: 20 meters
Rail car bed length: 18.5 meters
Rail car bed width: 2.77 meters
Maximum load weight: 56 M/T
Average weight of railcar: 24.5 M/T

Rlmmp(s)

Overall length: 10.8 meters
Total loading length: 9.56 meters
Railcar bed width: 3.15 meters
Maximum load weight: 61 M/T
Average weight of railcar: 16.5 M/T

Samms

Overall length: 16.4 meters
Total loading length: 15 meters
Railcar bed width: 3.10 meters
Maximum load weight: 65 M/T
Average weight of railcar: 31 M/T

TWA 800

Overall length: 27 meters
Total loading length: 25.66 meters
Loading length per section: 12.60 meters
Deep loading length per section: 8.87 meters
Car bed width: 3.11 meters
Total maximum load weight: 47 M/T
Maximum load weight per section: 23.5 M/T
Average weight of railcar: 25 M/T

SGSS-Z
(Slovenian Railways)

Overall length: 20.6 meters
Rail car bed length: 19.2 meters
Rail car bed width: 2.77 meters
Maximum load weight: 56 M/T
Average weight of railcar: 24.5 M/T

Railhead

Final set up prior to loading operations

Train positioned at loading ramp

Train secured to prevent movement

Position blocking/tie down material at loading ramp

Position vehicles at loading ramp

1 Inspect the railcars for debris, nails, snow and ice – clean if necessary.

2 Remove railcar stakes.

3 Remove tailgate locking mechanism.

4 Lower tailgates.

5 Lower side gates (if necessary).

OPERATIONAL REQUIREMENTS

Unit Commander

Train Commander

Railhead OIC/NCOIC

Host Nation Railroad Wagenmeister

All Personnel

Ground Guides

Unit Commanders will ensure:

- Vehicles, gun barrels and crane booms are properly locked and secured in coordination with Transportation Officer and the Host Nation Railmaster.

Train Commanders will:

- Obtain and control keys of loaded vehicles.

Railhead OIC/NCOIC will ensure:

- Support legs are lowered and tailgates and side braces are removed (if necessary) before loading operations begin.
- Trash is cleared from the area before the train leaves.

Host Nation Railroad Wagenmeister will:

- Work in close coordination with transportation officer or his representative during loading and unloading operations.
- Check the proper positioning, blocking and tie down of the loaded vehicles and equipment. This includes the proper locking and securing of gun barrels and crane booms.
- Act as the final approval authority on rail loading operations.

All Personnel will:

- Not to be on the same railcar as a moving vehicle. *The only exception is when a second or third vehicle is being placed on a railcar capable of carrying two or three vehicles. The second and third vehicle will move forward only after the first vehicle has stopped completely.*
- Not to jump off railcars.
- Not to walk between railcars.
- Not to walk backwards.
- Use proper techniques when lifting heavy material (i.e. railcar stakes, tailgates, blocking material.
- Not to ride in or climb on tanks, vehicles, and other equipment being transported by rail after the vehicles and equipment have been locked.

Ground guides will:

- Coordinate signals with drivers before ground guide operations (with flashlights after dark). The signals to control vehicle drivers shown in FM 21-60 will be used.
- Be seen by the driver at all times. If the driver loses sight of a ground guide, he or she will stop the vehicle immediately.
- Ensure only one ground guide will provide signals to a driver.
- Ensure that they will not walk or run backward. If ground guides are observed walking or running backwards, the vehicle operator will stop and make an on-the-spot correction.
- Ensure that they will not stand on the same rail car as the vehicle being guided.
- Be equipped with reflective vest and flashlights or chemical lights.
- Not place themselves in a dangerous position between two vehicles.

Hand and Arm Signals (FM 21-60)

Move the hands and forearms backward and forward, palms toward the chest.

MOVE FORWARD

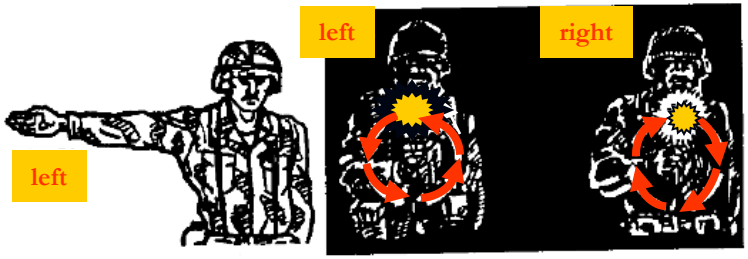

DAY
Extend the arm horizontally to side, palms outward.

NIGHT
Rotate a light to describe a circle 12 to 18 inches in diameter in the direction of the turn.

RIGHT or LEFT TURN

DAY
Extend the arm horizontally sideward, palm to the front; wave the arm slightly downward several times, keeping the arm straight. Do not move arm above horizontal.

NIGHT
Hold a light at shoulder level; blink it several times toward the vehicle.

SLOW DOWN

Hand and Arm Signals (FM 21-60)

DAY
Face the vehicle(s) being signalized, raise the hands to shoulder level, palms to the front. Move the hands forward and backward.

NIGHT
Hold a light at shoulder level; blink it several times toward the vehicle(s).

MOVE IN REVERSE (for stationary vehicles)

DAY
Raise the hand upward to the full extent of the arm, palm to the front. Hold that position until the signal is understood.

NIGHT
Move a light horizontally back and forth several times across the path of approaching traffic to stop vehicles. Use the same signal to stop engines.

HALT or STOP

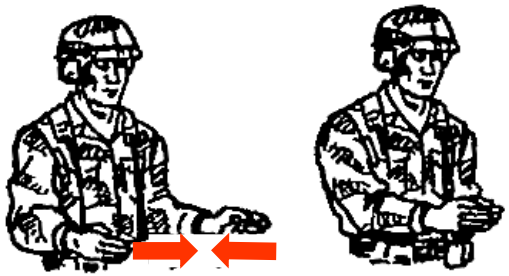

Face the vehicle(s) being signaled, extend the forearms to the front, palms inward and separated (width of the shoulders). Bring the palms together as the vehicle(s) approaches. The vehicle(s) must stop when the palms come together.

CLOSE DISTANCE BETWEEN VEHICLES AND STOP

Hand and Arm Signals (FM 21-60)

Extend the arm parallel to ground, hand open, and move the arm across the body, in a throat-cutting action.

STOP ENGINES

Cross the wrists at the throat; point the index finger in direction of steer, Make a fist of the other hand.

NEUTRAL STEER (track vehicles)

Clasp the hands together, palms facing, at the chin level.

STOP (alternate signal to stop track vehicle)

Ground Guide Do's . . . .

....and Don'ts !!!

Questions ?

Comments ?